1957-59 STUDEBAKER 3E&4E TRUCKS

COMPLETE 6-CYL

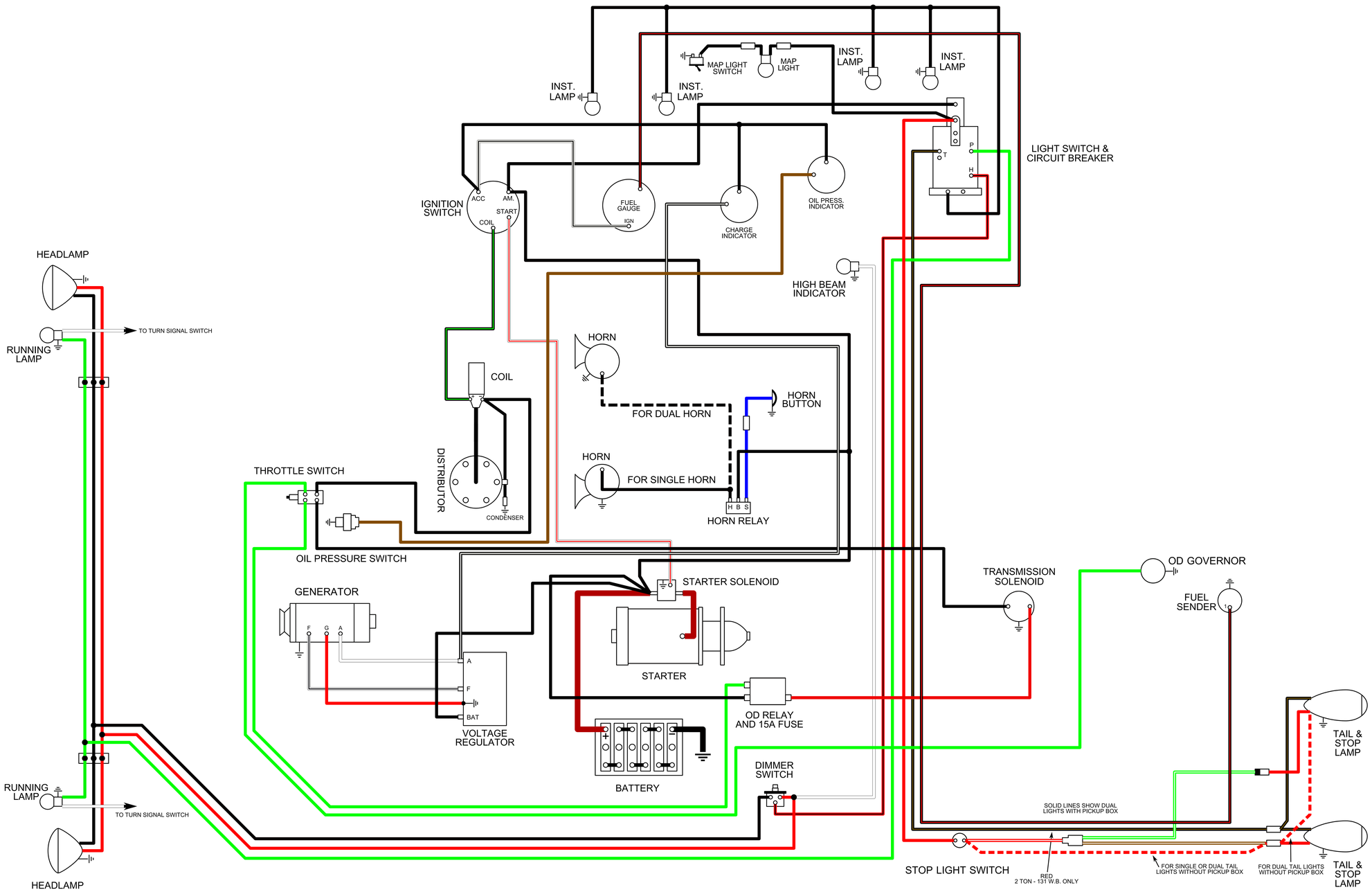

- BLACK
- WHITE
- RED
- BLUE
- GREEN
- LIGHT GREEN
- YELLOW
- TAN
- GRAY
- RED & BLACK
- RED & WHITE
- BLACK & WHITE
- BLACK & GREEN
- BLACK & BROWN
- BLACK & RED
- WHITE & BLACK
- WHITE & RED
- WHITE & GREEN
- WHITE & BROWN
- YELLOW & RED
- GREEN & BLACK

- CONNECTOR AS PART OF HARNESS
- LOOSE CONNECTOR
- FUSE
- GROUND CONNECTION
- RESISTOR

CINCO

1957-59 STUDEBAKER 3E&4E TRUCKS

COMPLETE V8

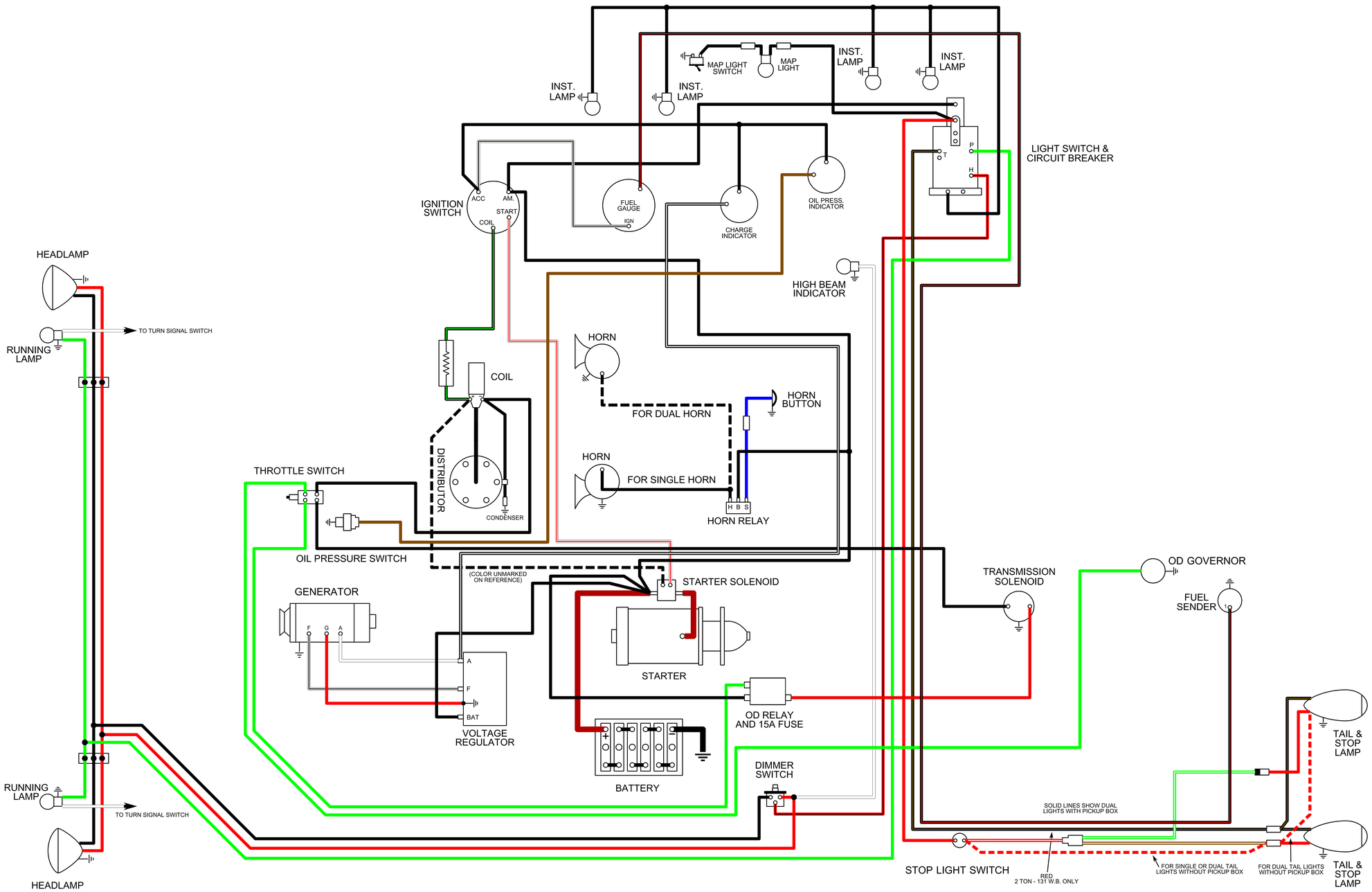

- BLACK
- WHITE
- RED
- BLUE
- GREEN
- LIGHT GREEN
- YELLOW
- TAN
- GRAY
- RED & BLACK
- RED & WHITE
- BLACK & WHITE
- BLACK & GREEN
- BLACK & BROWN
- BLACK & RED
- WHITE & BLACK
- WHITE & RED
- WHITE & GREEN
- WHITE & BROWN
- YELLOW & RED
- GREEN & BLACK

- CONNECTOR AS PART OF HARNESS
- LOOSE CONNECTOR
- FUSE
- GROUND CONNECTION
- RESISTOR

CINCO

1957-59 STUDEBAKER 3E&4E TRUCKS

MAIN POWER

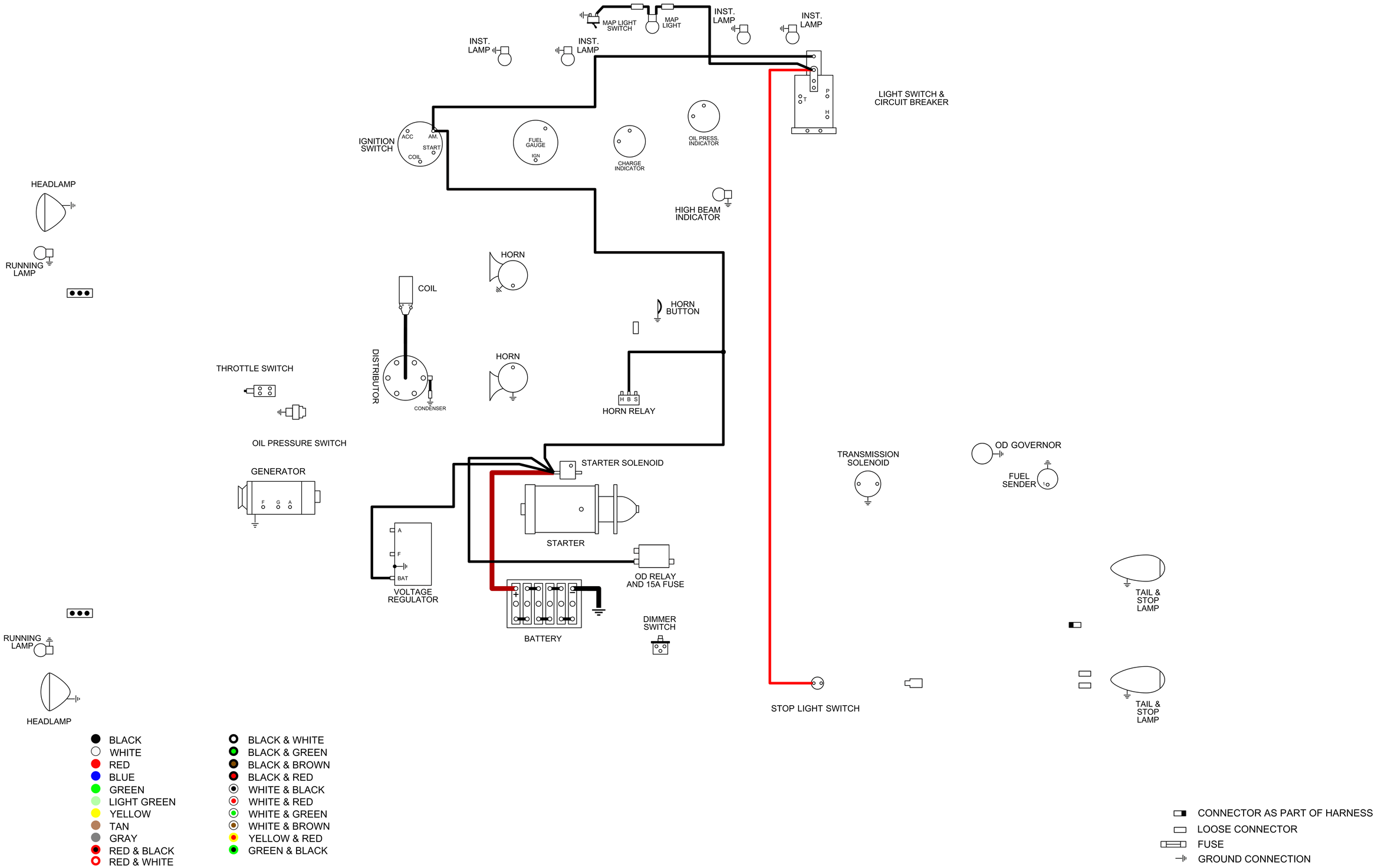

CINCO

1957-59 STUDEBAKER 3E&4E TRUCKS

STARTER 6-CYL

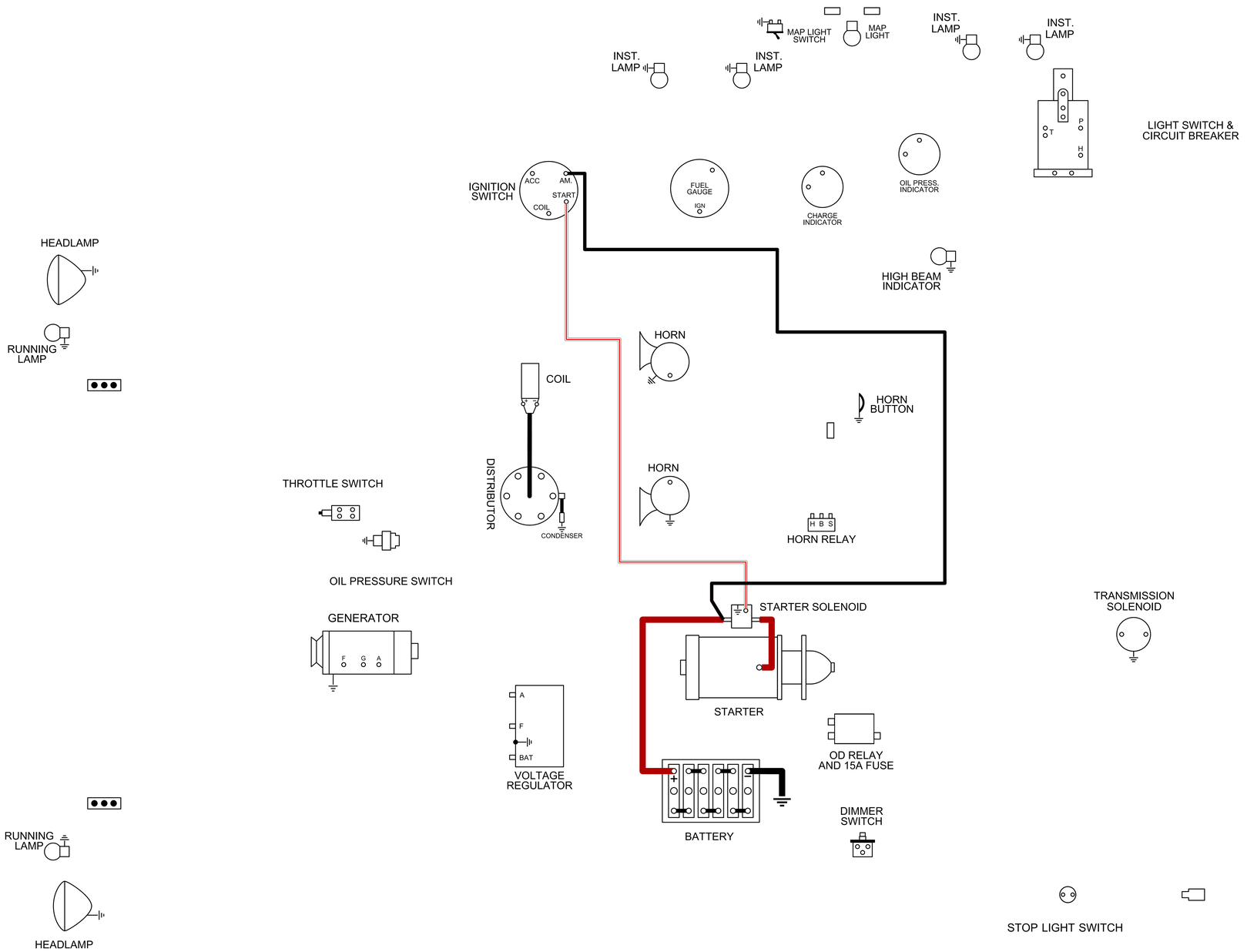

- BLACK
- WHITE
- RED
- BLUE
- GREEN
- LIGHT GREEN
- YELLOW
- TAN
- GRAY
- RED & BLACK
- RED & WHITE
- BLACK & WHITE
- BLACK & GREEN
- BLACK & BROWN
- BLACK & RED
- WHITE & BLACK
- WHITE & RED
- WHITE & GREEN
- WHITE & BROWN
- YELLOW & RED
- GREEN & BLACK

- CONNECTOR AS PART OF HARNESS
- LOOSE CONNECTOR
- FUSE
- GROUND CONNECTION
- RESISTOR

CINCO

1957-59 STUDEBAKER 3E&4E TRUCKS

STARTER V8

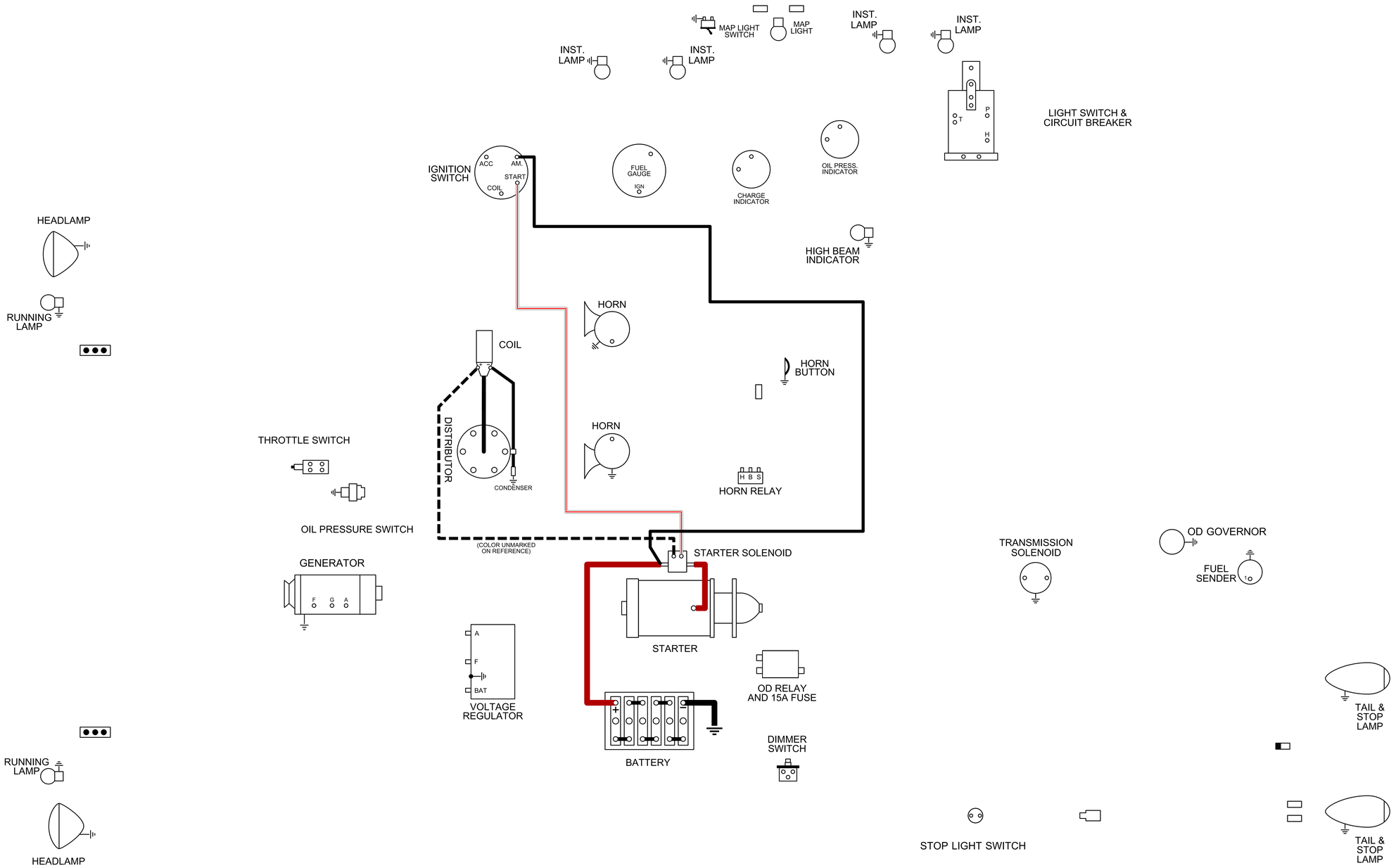

- BLACK
- WHITE
- RED
- BLUE
- GREEN
- LIGHT GREEN
- YELLOW
- TAN
- GRAY
- RED & BLACK
- RED & WHITE
- BLACK & WHITE
- BLACK & GREEN
- BLACK & BROWN
- BLACK & RED
- WHITE & BLACK
- WHITE & RED
- WHITE & GREEN
- WHITE & BROWN
- YELLOW & RED
- GREEN & BLACK

- CONNECTOR AS PART OF HARNESS
- LOOSE CONNECTOR
- FUSE
- GROUND CONNECTION
- RESISTOR

CINCO

1957-59 STUDEBAKER 3E&4E TRUCKS

IGNITION SYSTEM 6-CYL

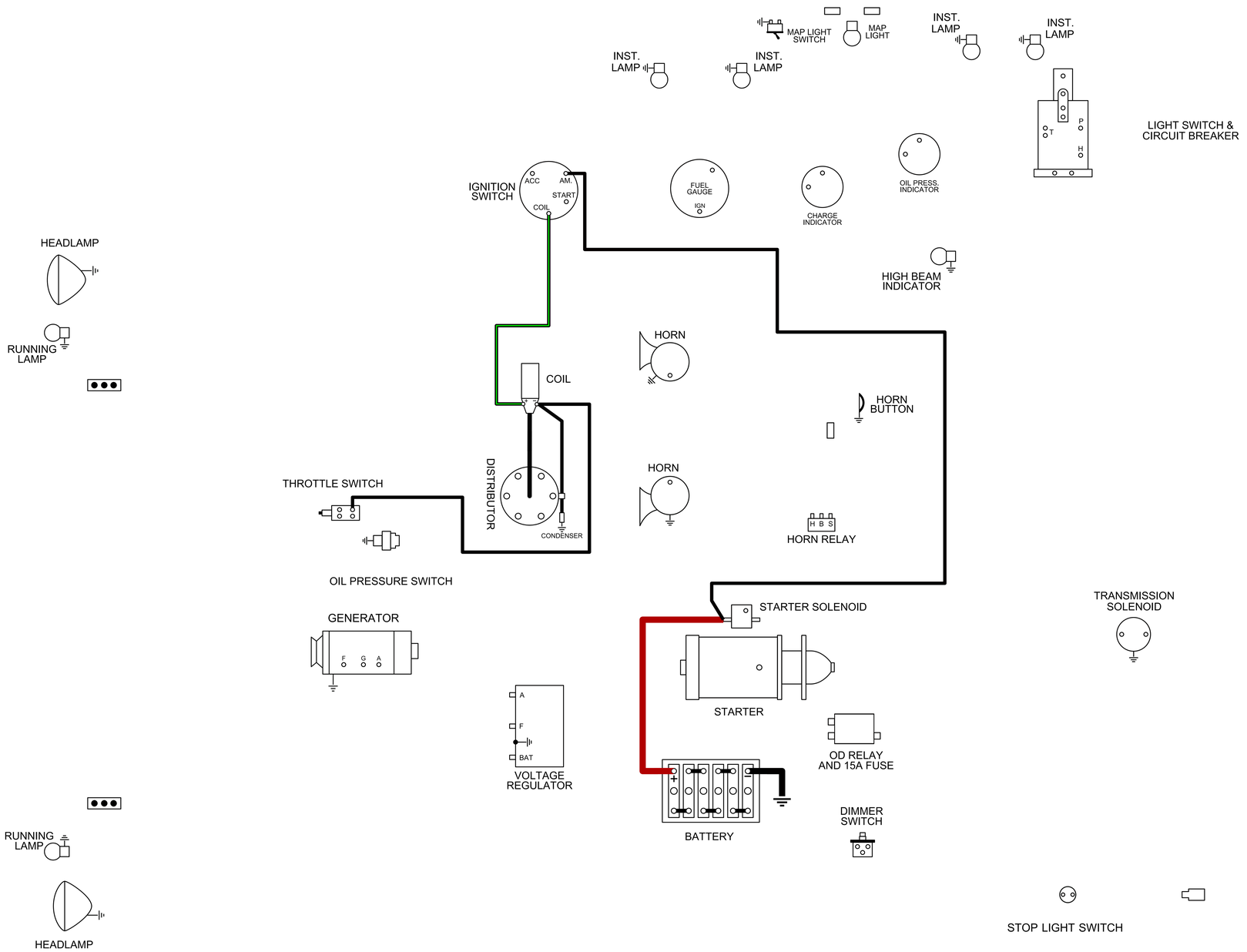

- BLACK
- WHITE
- RED
- BLUE
- GREEN
- LIGHT GREEN
- YELLOW
- TAN
- GRAY
- RED & BLACK
- RED & WHITE
- BLACK & WHITE
- BLACK & GREEN
- BLACK & BROWN
- BLACK & RED
- WHITE & BLACK
- WHITE & RED
- WHITE & GREEN
- WHITE & BROWN
- YELLOW & RED
- GREEN & BLACK

- CONNECTOR AS PART OF HARNESS
- LOOSE CONNECTOR
- FUSE
- GROUND CONNECTION
- RESISTOR

CINCO

1957-59 STUDEBAKER 3E&4E TRUCKS

IGNITION SYSTEM V8

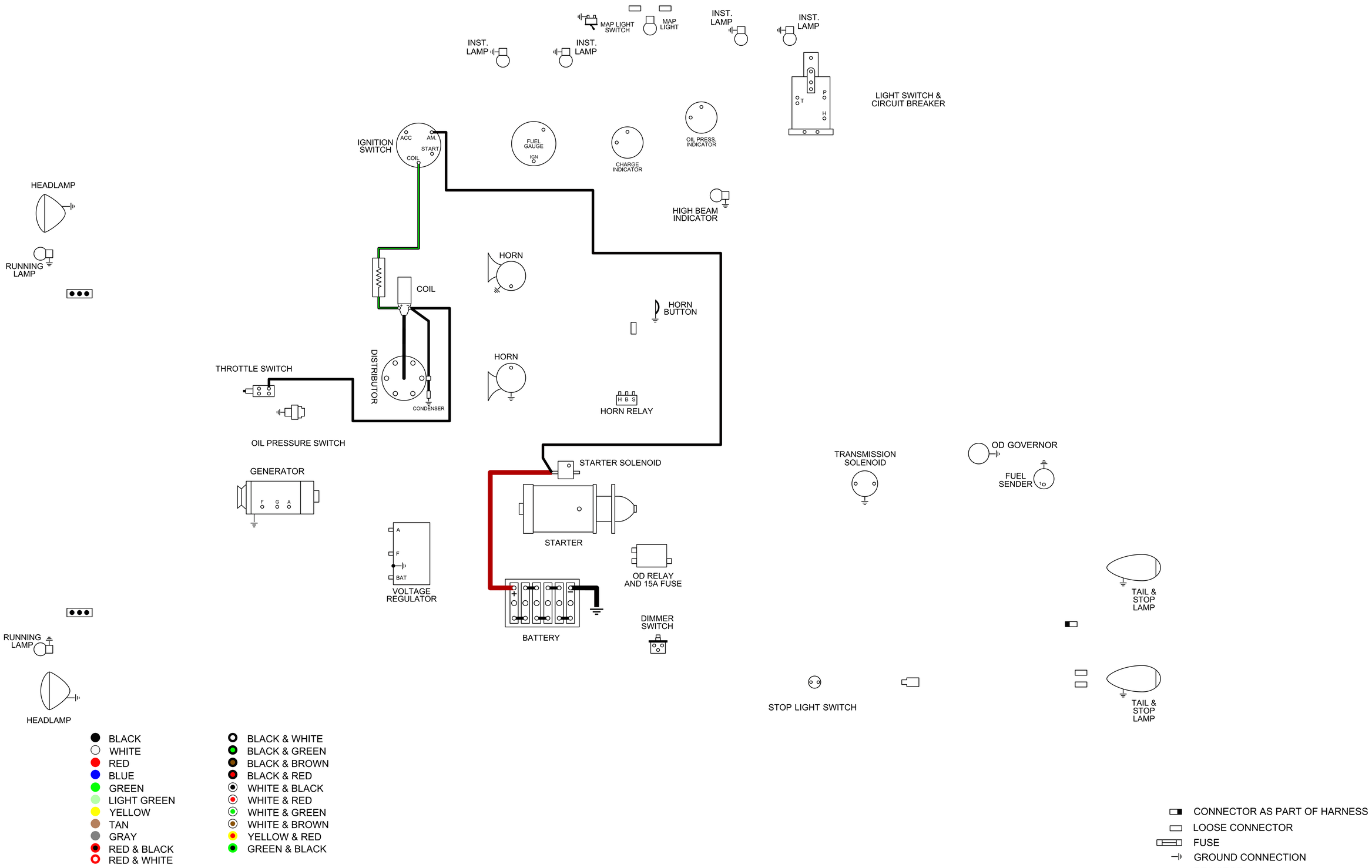

CINCO

1957-59 STUDEBAKER 3E&4E TRUCKS

CHARGING SYSTEM

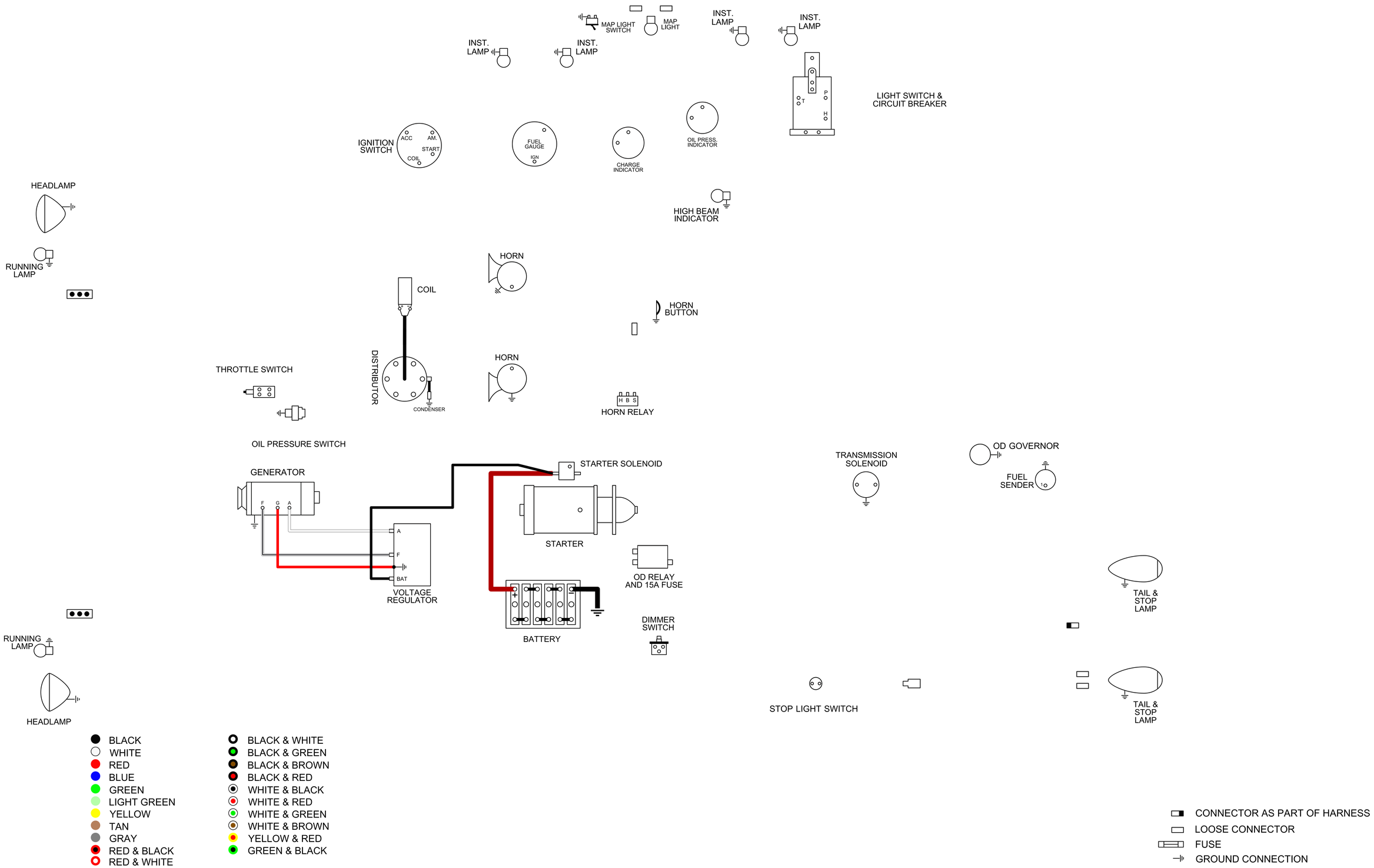

CINCO

1957-59 STUDEBAKER 3E&4E TRUCKS

HEADLIGHTS

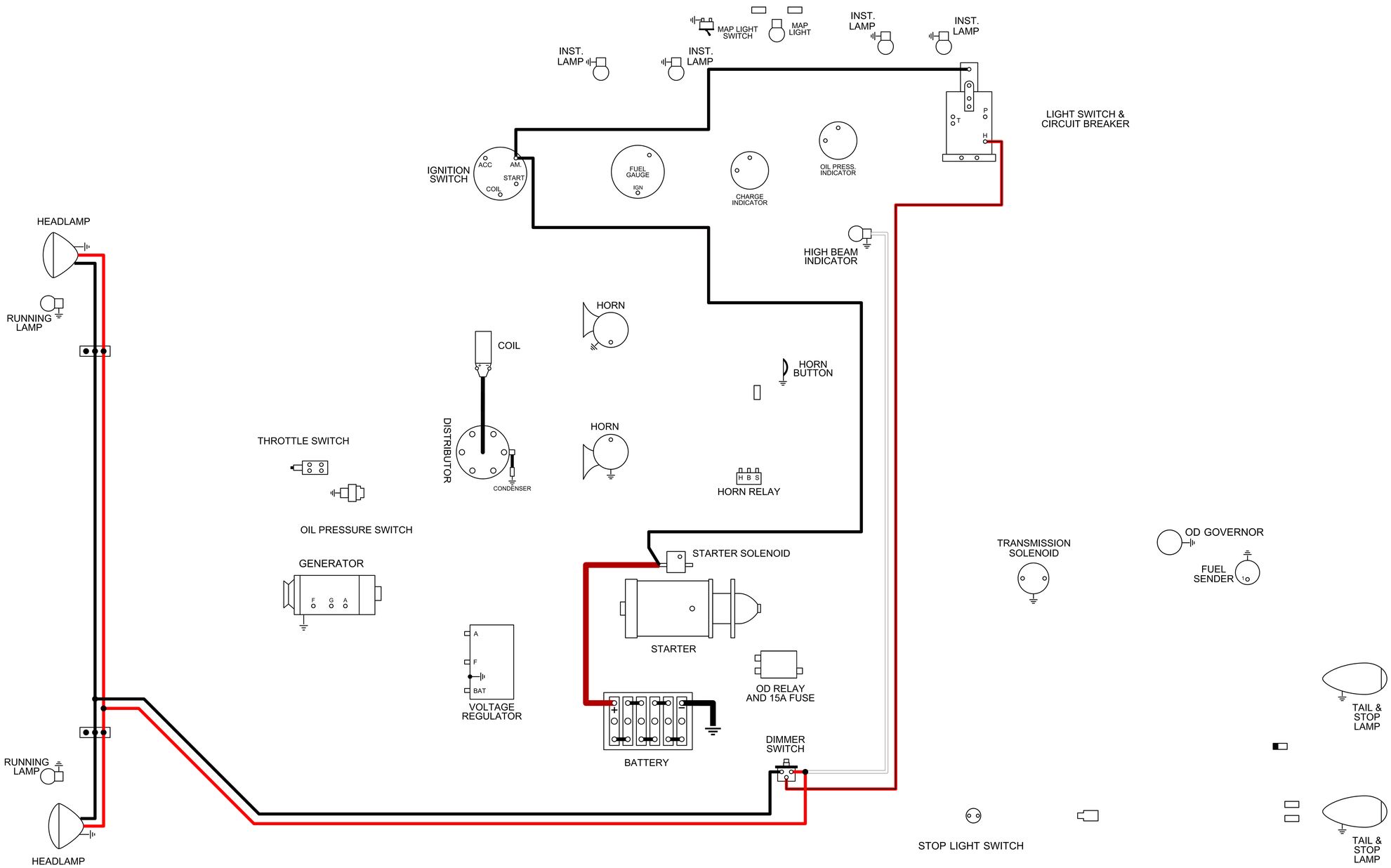

- BLACK
- WHITE
- RED
- BLUE
- GREEN
- LIGHT GREEN
- YELLOW
- TAN
- GRAY
- RED & BLACK
- RED & WHITE
- BLACK & WHITE
- BLACK & GREEN
- BLACK & BROWN
- BLACK & RED
- WHITE & BLACK
- WHITE & RED
- WHITE & GREEN
- WHITE & BROWN
- YELLOW & RED
- GREEN & BLACK

- CONNECTOR AS PART OF HARNESS
- LOOSE CONNECTOR
- FUSE
- GROUND CONNECTION
- RESISTOR

CINCO

1957-59 STUDEBAKER 3E&4E TRUCKS

RUNNING LIGHTS

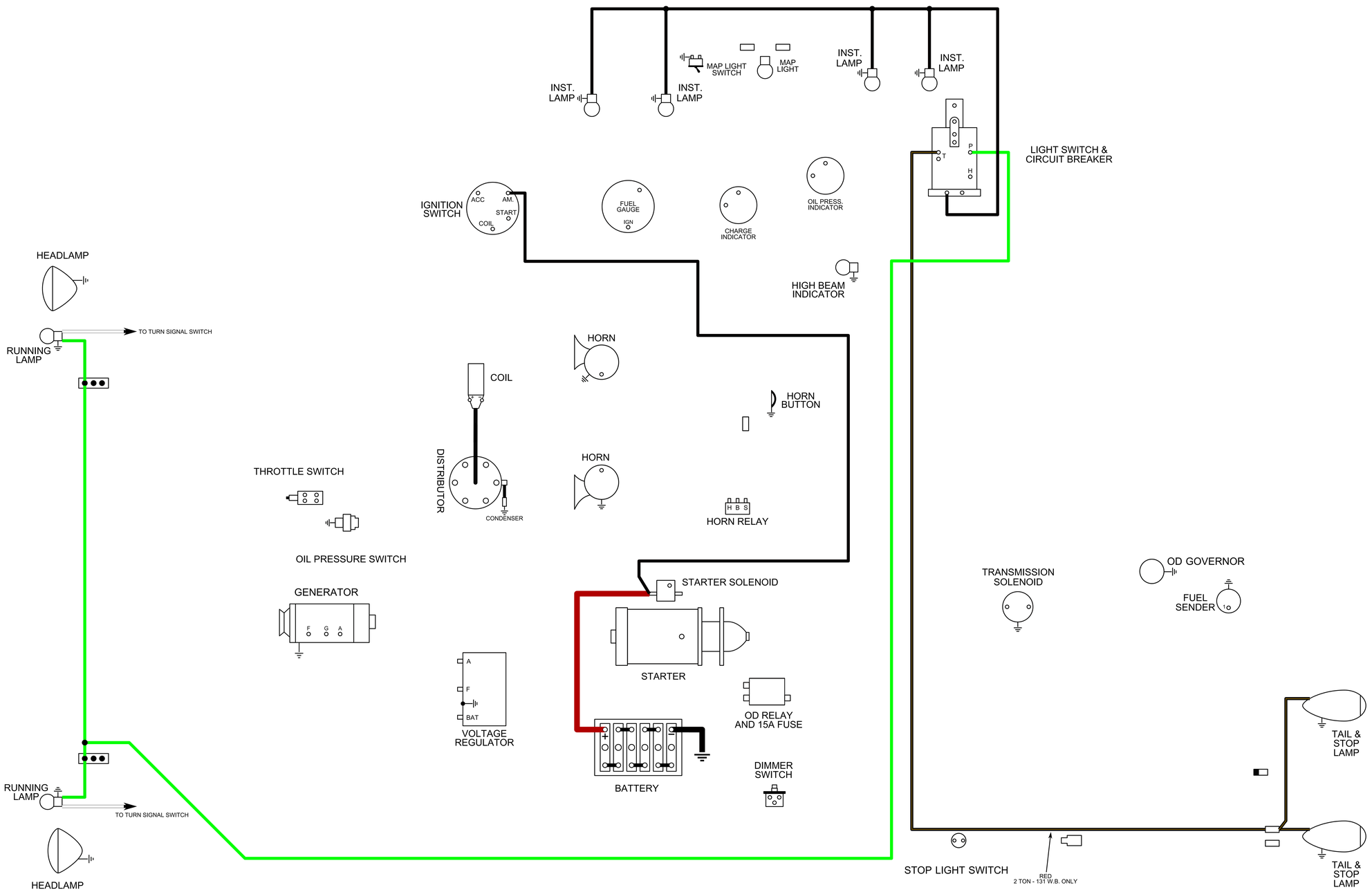

- BLACK
- WHITE
- RED
- BLUE
- GREEN
- LIGHT GREEN
- YELLOW
- TAN
- GRAY
- RED & BLACK
- RED & WHITE
- BLACK & WHITE
- BLACK & GREEN
- BLACK & BROWN
- BLACK & RED
- WHITE & BLACK
- WHITE & RED
- WHITE & GREEN
- WHITE & BROWN
- YELLOW & RED
- GREEN & BLACK

- CONNECTOR AS PART OF HARNESS
- LOOSE CONNECTOR
- FUSE
- GROUND CONNECTION
- RESISTOR

CINCO

1957-59 STUDEBAKER 3E&4E TRUCKS

BRAKE LIGHTS

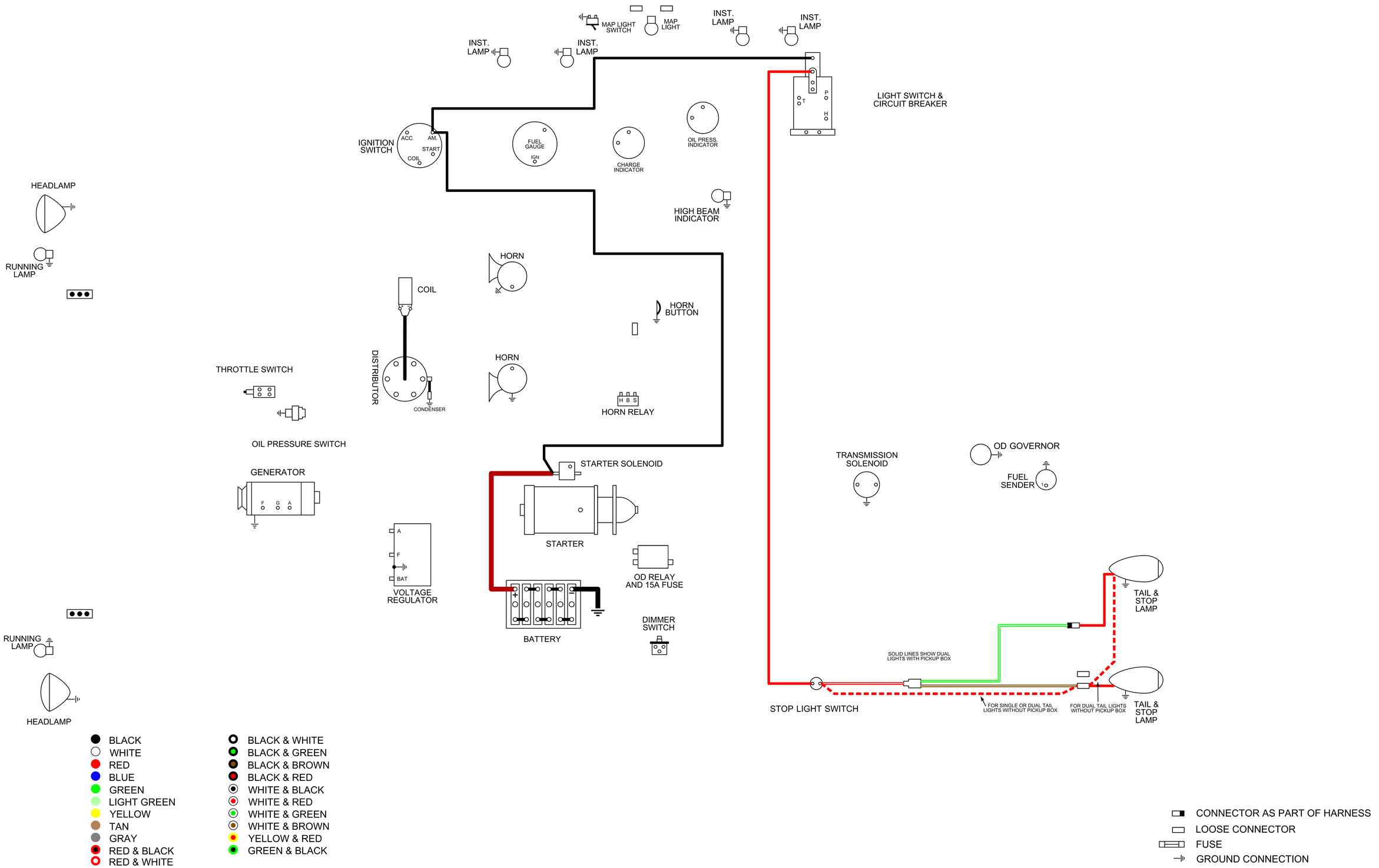

CINCO

1957-59 STUDEBAKER 3E&4E TRUCKS

OVERDRIVE

(1/2 AND 3/4 TON)

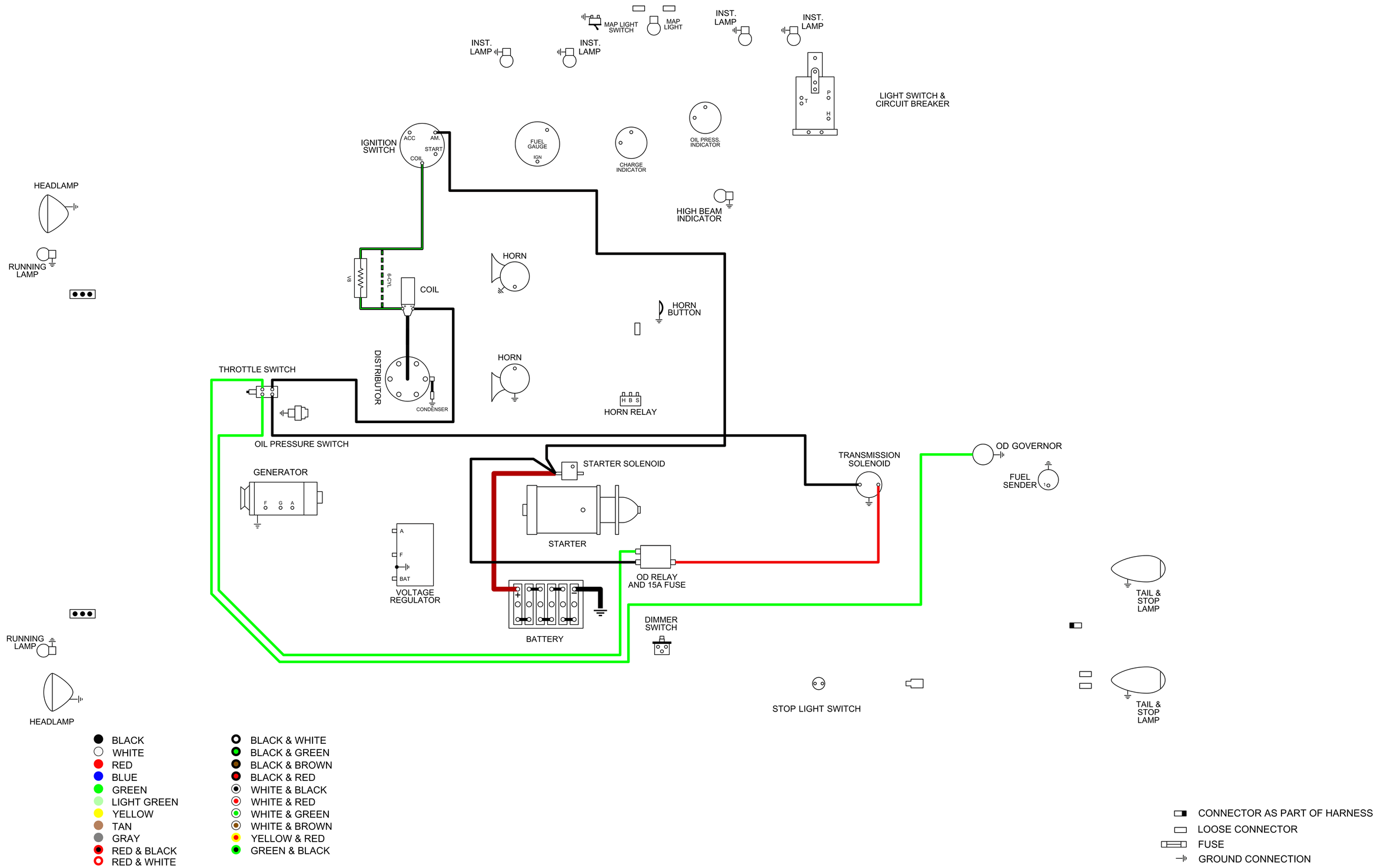

CINCO

1957-59 STUDEBAKER 3E&4E TRUCKS

HORN

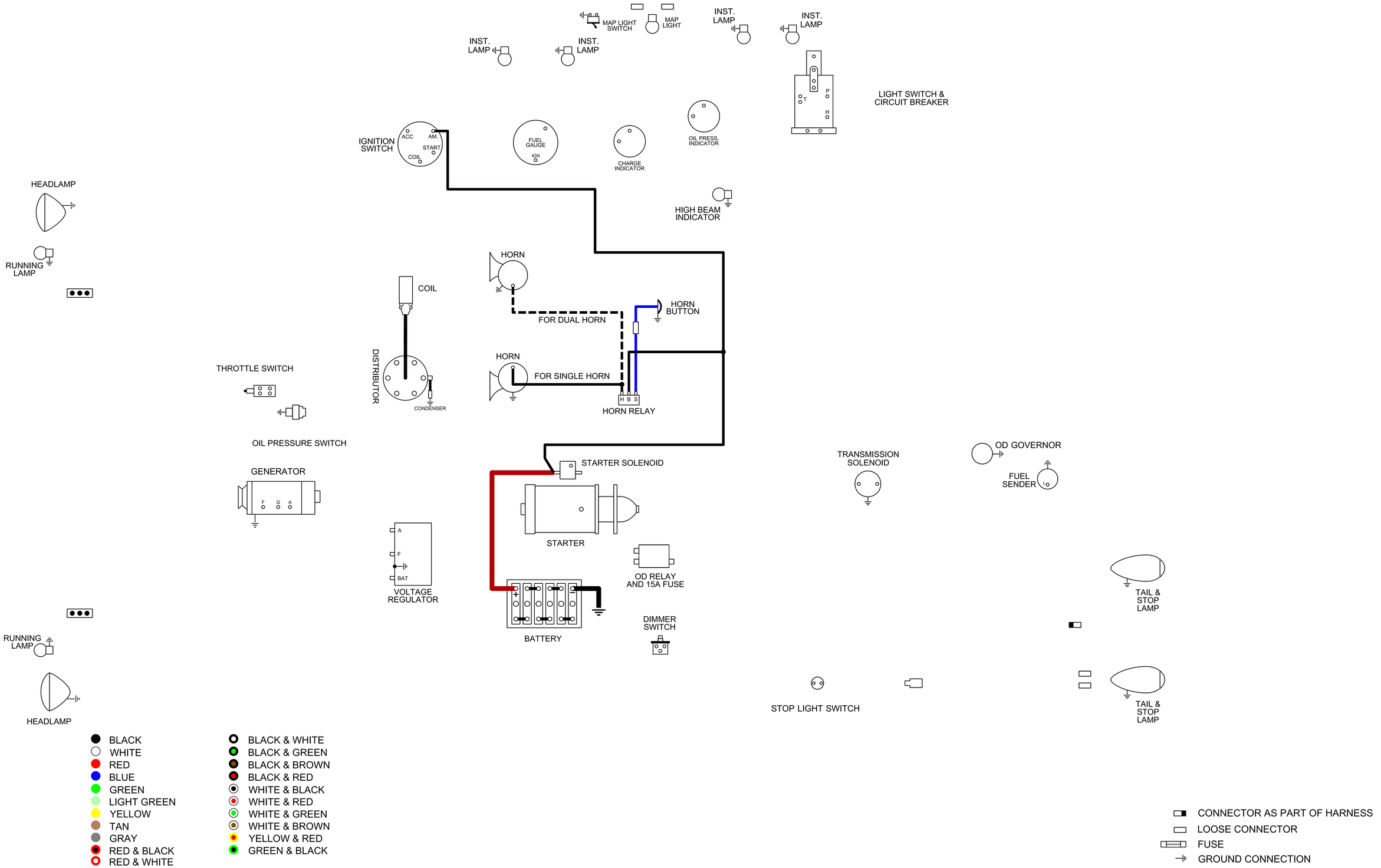

CINCO

1957-59 STUDEBAKER 3E&4E TRUCKS

GAUGES

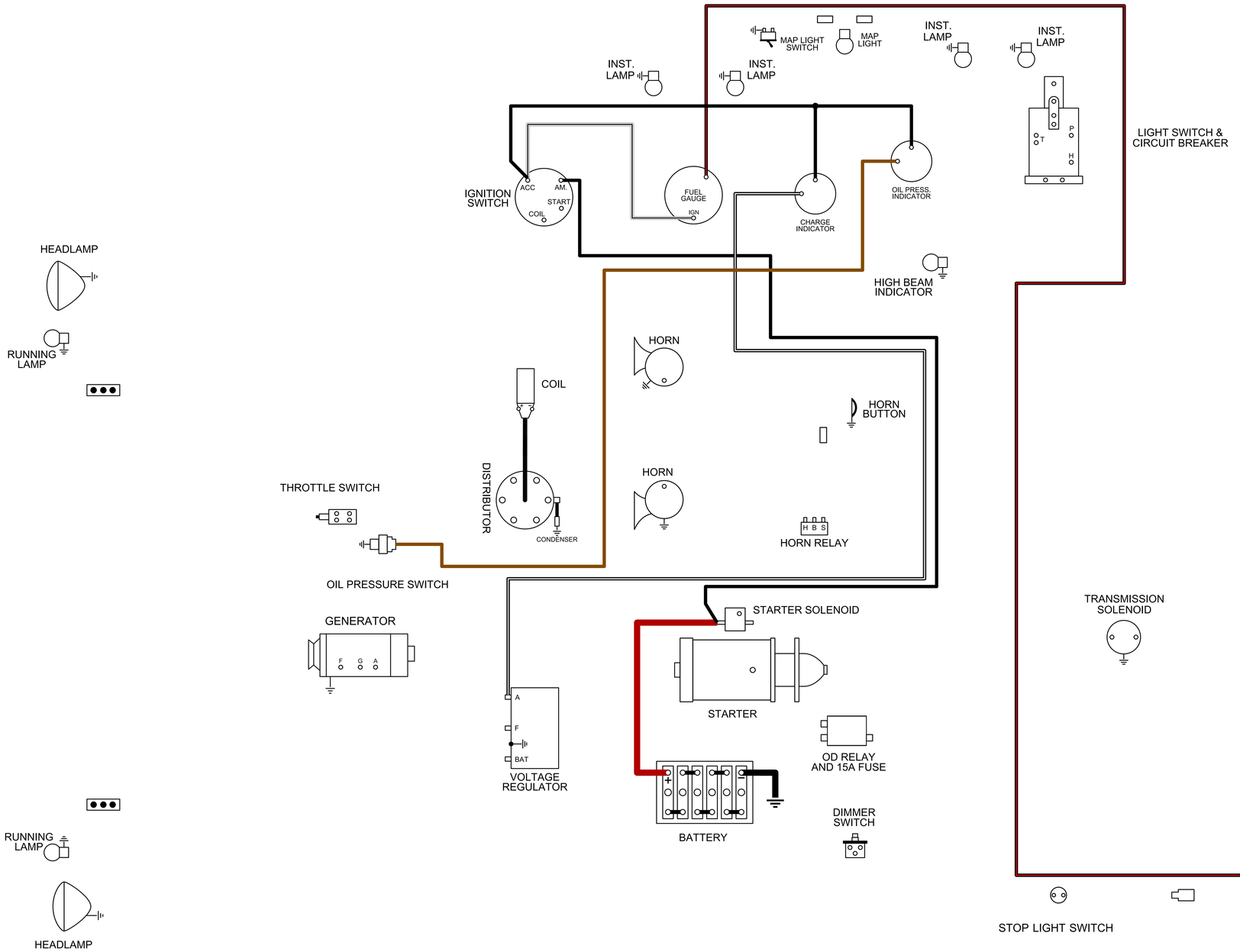

- BLACK
- WHITE
- RED
- BLUE
- GREEN
- LIGHT GREEN
- YELLOW
- TAN
- GRAY
- RED & BLACK
- RED & WHITE
- BLACK & WHITE
- BLACK & GREEN
- BLACK & BROWN
- BLACK & RED
- WHITE & BLACK
- WHITE & RED
- WHITE & GREEN
- WHITE & BROWN
- YELLOW & RED
- GREEN & BLACK

- CONNECTOR AS PART OF HARNESS
- LOOSE CONNECTOR
- FUSE
- GROUND CONNECTION
- RESISTOR

CINCO

1957-59 STUDEBAKER 3E&4E TRUCKS

AUXILIARY CIRCUITS

NOTE: THE REFERENCE DIAGRAM USED WAS LABELED FROM THE PRINTER AS FOR THE SAME VEHICLES AS THE MAIN DIAGRAM BUT REFERS TO COMPONENTS WHICH DO NOT EXIST AND WIRE COLORS WHICH ARE DIFFERENT ON THE MAIN DIAGRAM. AS I DO NOT HAVE A VEHICLE TO WHICH I CAN REFER I DO NOT KNOW WHICH ASPECTS OF WHICH DIAGRAM ARE CORRECT. THIS SHEET SHOULD BE INTERPRETED AS SHOWING THE CONCEPTS IF NOT THE SPECIFICS OF EACH SUBSYSTEM.

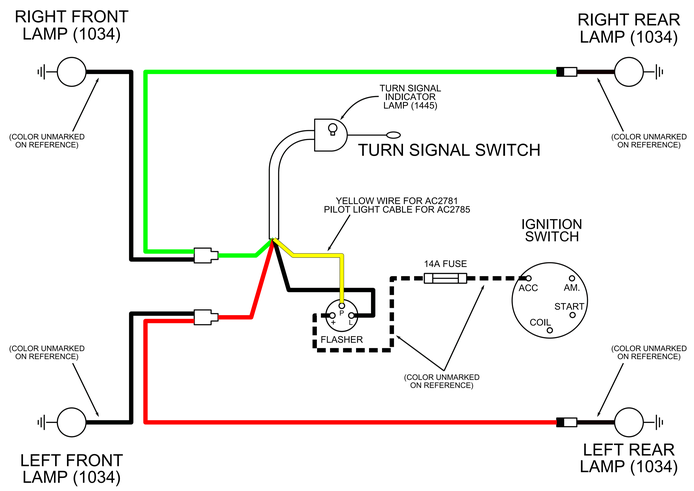

TURN SIGNALS (CLASS A)

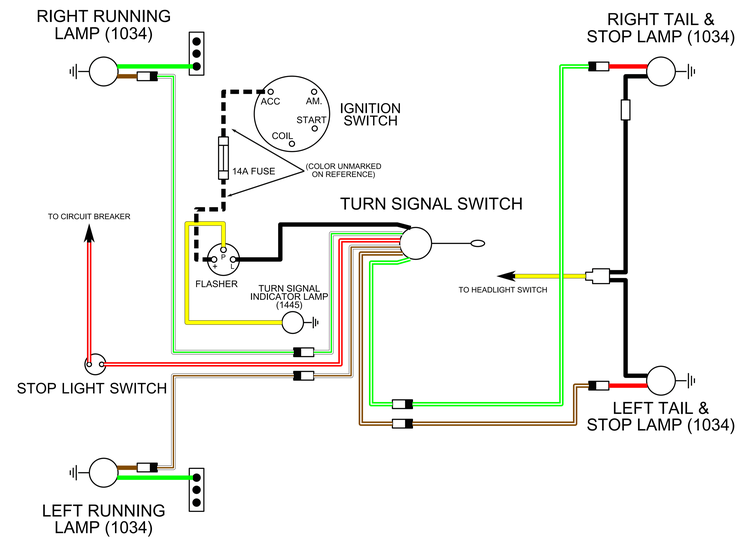

TURN SIGNALS (CLASS B)

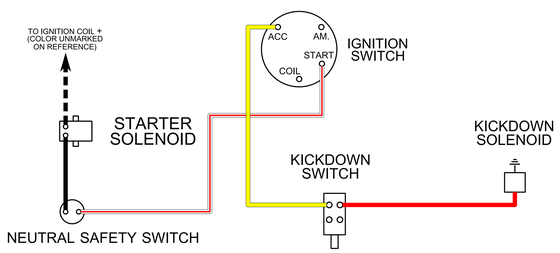

AUTOMATIC TRANSMISSION (WITH V8)

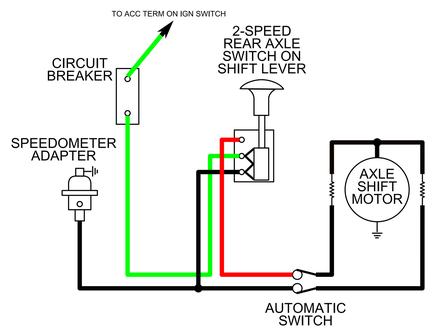

2-SPEED REAR AXLE

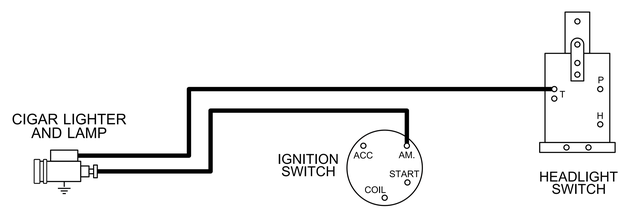

CIGAR LIGHTER

- BLACK
- WHITE
- RED
- BLUE
- GREEN
- LIGHT GREEN
- YELLOW
- TAN
- GRAY
- RED & BLACK
- RED & WHITE
- BLACK & WHITE
- BLACK & GREEN
- BLACK & BROWN
- BLACK & RED
- WHITE & BLACK
- WHITE & RED
- WHITE & GREEN
- WHITE & BROWN
- YELLOW & RED
- GREEN & BLACK

- CONNECTOR AS PART OF HARNESS
- LOOSE CONNECTOR
- FUSE
- GROUND CONNECTION
- RESISTOR

CINCO